बैंक नोट पेपर मिल् इण्डिया प्रा. लिमिटेड
BANK NOTE PAPER MILL INDIA PVT LIMITED
JV of SPMCIL - A Govt. of India Enterprises & BRBNMPL - A Subsidiary of RBI

Ph no. 0821-2401 111; Email: scm.tender@bnpmindia.com

OPEN TENDER ENQUIRY No. BNPM/OTE/COMPRESSOR/ 0457/2021-22

Issue Date: 13.10.2021 @ 1100 Hrs. Closing Date: 26.10.2021 @ 1400 Hrs.
Extension 1 up to: 02.11.2021 @ 1400 Hrs.

All the pages of this tender document are to be signed, stamped filled up and submitted as bid document by the eligible bidders is to be submitted within due date.

A. Technical Specification & Scope of work:

Supply of below mentioned items.

Sl. no.	Description	Qty (Nos.)
1.	Refrigerant Compressor (Reciprocating Type) along with all accessories- (As per the technical specification mentioned hereunder)	1

Technical Specification

Model No. MTZ72HN4A (Danfoss make);

In case of equivalent supply to Danfoss make compressor, bidder's scope of supply:

1. Capacity of the compressor have to be matched (equivalent to Danfoss make compressor: MTZ72HN4A)

2. Suction connection & Discharge connection: Need to match with the present pipe line size of the suction & discharge in the chiller unit.
For Suction: 23 mm
For Discharge: 16.5 mm

(In order to match with the connection size and piping, required accessories like pipes, connectors/fittings etc., may be supplied along with the compressor).

3. Specification of the compressor:-
IPR valve: 30 bar / 8 bar
Maximum system test pressure: Low Side / High side
25 bar (g) / 30 bar (g)
Maximum differential test pressure: 30 bar
Refrigerant charge limit: min 5 kg
Approved refrigerants: R404A, R507A, R134a, R407C

LP side: PS (min 22.6 bar), TS max (50 deg C) , TS min(-35 deg C)

HP side: PS (min 29.4 bar), TS max (68 deg C) , TS min(-35 deg C)

Electrical Characteristics:
Nominal voltage: 380-400V/3/50Hz - 460V/3/60Hz
Voltage range: 340-440 V @ 50Hz - 414-506 V @ 60Hz
Motor protection: Internal overload protector
Compressor Height <= 450 mm

Parts need to be supplied with compressor:

Pipes, & connectors/fittings if required.

Mounting kit with grommets, bolts, nuts, sleeves and washers.

Suction & Discharge solder sleeves, nuts and gaskets

Initial oil charge

Installation instructions

Photograph of existing compressor and drawing are attached herewith.

B. Terms & Conditions:

1. **Documents to be submitted**:
   - **a)** Signed copy of this document (All the pages).
   - **b)** Filled price details as per the format provided below at point 17.
   - **c)** Technical details /datasheet for the enquired product (if applicable).
   - **d)** Micro / Small Enterprise (Certificate issued by MSME)/UDYAM/NSIC certificate (If applicable).

2. **Price:** Price shall be inclusive of P&F, Insurance, Freight and GST. Price shall remain fixed & no price variation shall be accepted till pendency of contract.

3. **Terms of Payment:** 100% within 30 days from the date of receipt and acceptance of material as per technical specification and scope of work at BNPM Plant, Mysuru and on production of all required documents by the supplier. Warranty certificate (if applicable) and NEFT/RTGS details shall be furnished along with the Original Invoice.

4. **Delivery Terms & Delivery Address:** Delivery shall be made on F.O.R Basis, Bank Note Paper Mill India Pvt. Ltd., Mysore.
   Delivery Address: Engineering Stores, Bank Note Paper Mill India Pvt. Ltd., Note Mudran Nagar, Mysore - 570003. Stores contact details: 0821-2401476/486.

5. **Taxes:** All Taxes shall be as applicable in GST regime.
   Payment of CGST, SGST, IGST & UTGST: The suppliers are required to adhere the following procedure in order to honour the payment against CGST, SGST, IGST & UTGST in the invoice.

   i) An invoice issued by the vendor for goods or services or both as applicable should be in accordance with the provisions of Sec 31 of the CGST Act & should contain all the prescribed information's in accordance with Chapter VI of CGST rules 2017.

   ii) A debit note issued if any, by the vendor should be in accordance with the provisions of Sec 34 of the CGST Act.

   iii) The vendor should mandatorily upload the aforementioned documents in respective GSTR, details of outward supplies of goods or services as applicable within the prescribed time under GST Act.

   iv) The vendor should provide the relevant documents to confirm the tax charged on the invoice has been paid to the credit of government after adjusting the ITC if any.

   Notwithstanding the above, the supplier should provide indemnification as follows:

   In the event of non-compliances with respect to GST Act & Rules by the successful bidder, the purchaser is allowed to adjust the GST amount from retention amount (either in BG or in cash) held by the company. If no amount is available for recovery, the successful bidder will refund the GST liability within 10 days from the date of GST reversal in GSTRN.

   The above requirements are mandatory to claim any GST liability, falling which, the GST liability will not be paid /reimbursed/accepted.

A. <u>The bidder should consider the following points while quoting GST Rate in their bids:</u>

1. In case of unregistered bidders, the rate and amount of GST shall be shown as "Nil".
2. In case of a compounding dealer, GST shall be quoted as "Nil" as compounded dealers cannot collect GST from the consumers. The price quoted therefore shall be construed as all inclusive.
3. In case of work contracts or pure labour contracts, the bidder shall quote single GST rate for the work.
4. In case of composite supplies, i.e., a supply consisting of one principal supply and other ancillary supplies, the supply will attract the GST Rate of the principal supply. For example, if Item A in the supply order is the major or principal supply and other items are ancillary supplies, the bidder shall quote the GST Rate applicable to the principal goods (i.e., Item A) being supplied.
5. In case of mixed supply, i.e., a combination of two or more individual goods made together for a single price (each of these items can be supplied

separately and is not dependent on any other), the total supply will attract the GST rate of the item which has the highest rate of tax. For example, if Item A in the mixed supply attracts highest rate of tax, the bidder shall quote the GST rate applicable to item A for total mixed supply.

6. In case of supplies which are neither composite nor mixed supplies, the bidder shall quote the GST Rate applicable to each item of supply separately.
7. If there is any difference of opinion regarding classification in HSN code, the bidder should sought clarification/raise query within the given time from the date of tender and it would be clarified before submitting the bid. Once clarified then that will be final & binding and no deviation shall be granted.

B. Other instructions for the bidders to claim any GST liability, failing which, the GST liability will not be paid/reimbursed/accepted:

1. Registered/compounding Contractor/supplier should produce GST Invoice containing all the particulars stated in Rule 46 of the CGST Rules, 2017 in accordance with the provisions of Section 31 of the CGST ACT.
2. The supplier should mandatorily update the invoice details in GSTR-1, details of outward supplies of goods or services within the prescribed time under GST Act
3. The Payment shall be made net of TDS as per the provisions of CGST/SGST/IGST Act.
4. Wherever there is difference in the amount admitted, the supplier may be directed to issue a Credit Note (in case of reduction in the Invoice value)/Debit Note (in case of increase in the Invoice value), and payment shall be released only after the receipt of such Debit or Credit Note
5. Supplier should provide the relevant documents to confirm the tax charged on the invoice has been paid to the credit of Government after adjusting with ITC, if any.
6. Supplier should provide indemnification as follows: "In the event of non-compliances with respect to GST ACT and Rules by the supplier, the supplier should refund the GST liability within 10 days from the date of GST reversal in GSTRN failing which the purchaser shall recover the GST amount from the retention amount (whether in BG or in Cash) held by the company".

6. **Warranty:** The product supplied shall be under warranty for 12 months from the date of receipt of material at BNPM Plant, Mysore. Warranty certificate to be enclosed wherever applicable.
   If the applicable warranty period is less than 12 months then the same has to be mentioned at the appropriate place provided at page no. 8 of this enquiry document.

7. **Liquidated Damages (LD):** Liquidated damages shall be applicable at the rate of 0.5% per week or part thereof until actual delivery or performance, subject to a maximum deduction of 10% of the delayed good's /service's contract price.

8. **Delay in supplier's performance:** Time for and the date specified in the contract or as extended for the delivery of the stores shall be deemed to be the essence of the contract and the supplier shall deliver the goods and perform the services under the contract within the time schedule specified by BNPM in the contract.

   Any delay attributable to the supplier in maintaining its contractual obligations towards delivery of goods and performance of services shall render the supplier liable to any or all the following sanctions besides any administrative action such as (a) Imposition of liquidity damages (as mentioned in point 7 of this enquiry document); (b) Termination of contract for default (as mentioned in point 12 of this enquiry document).

9. **Extension of Time:** If the contract is delayed in the progress of work by changes ordered in the work, or any clause which BNPM shall decide to justify the delay, then the time of completion shall be extended by a reasonable time.

   If at any time during the currency of contract, the supplier encounters conditions hindering timely delivery of the goods and performance of services, the supplier shall promptly inform BNPM in writing about the same and its likely duration and make a request to BNPM for extension of the delivery schedule accordingly. On receiving the supplier's communication, BNPM shall examine the situation as soon as possible and, at its discretion, may agree to extend the delivery schedule, with or without liquidated damages for completion of supplier's contractual obligations by issuing an amendment to the contract.

10. **Rejection Replacement:** In case of supplies, materials not meeting our specification will be rejected outright and the rejected material shall be taken back within 7 days at the cost and risk of the supplier and replacement should be made within 15 days from the date of intimation. No payment shall be made for rejected item. If the material is not taken back within the stipulate period, BNPM reserves the right to dispose-off the material at the risk and expense of the vendor as per provision under Section IV: General conditions of contract.

11. **Risk Purchase Clause:** If the supplier fails to abide by the terms and conditions of the contract/agreement, or fails to supply the material as per the delivery schedule or any time repudiates the contract,

    Procure the tendered item / render service from other agencies at the risk and cost of the supplier. The cost difference between the alternative arrangement and existing contract value wherein default has been made will be recovered from the supplier along with the other incidental charges.

In case of procurement through alternative sources, if procurement price is lower than the existing contract value wherein default has been made, in such case no benefit on this account will be passed on to the supplier.

12. **Termination for Convenience (Foreclosure) Clause:** BNPM reserves the right to terminate the contract, in whole or in part for its (BNPM's) convenience, by serving written notice on the supplier at any time during the currency of the contract. The notice shall specify that the termination is for the convenience of BNPM. The notice shall also indicate inter-alia, the extent to which the supplier's performance under the contract is terminated, and the date with effect from which such termination will become effective.

13. **Settlement of Disputes through Arbitration:** All disputes and differences of any kind whatsoever arising out of or in connection with the contract, whether during the progress of the work or after their completion except accepted matters shall be settled through arbitration process as per the Arbitration & Conciliation Act, 1996. The venue of arbitration shall be Mysore, Karnataka.

14. **Legal Jurisdiction:** The Courts of Mysore (Karnataka State) shall alone have jurisdiction to decide on any legal matter of dispute whatsoever arising out or in respect of the contract.

15. **Force Majeure:** In the event of any unforeseen event directly interfering with the supply of stores arising during the currency of the contract, such as war, hostilities, acts of the public enemy, civil commotion, sabotage, fires, floods, explosions, epidemics, quarantine restrictions, strikes, lockouts, or acts of God, the Contractor shall, within a week from the commencement thereof, notify the same in writing to the Purchaser with reasonable evidence thereof. Unless otherwise directed by BNPM in writing, the supplier shall continue to perform its obligations under the contract as far as reasonably practical, and shall seek all reasonable alternative means for performance not prevented by the Force Majeure event. If the force majeure condition(s) mentioned above be in force for a period of 90 days or more at any time, either party shall have the option to terminate the contract on expiry of 90 days of commencement of such force majeure by giving 14 days' notice to the other party in writing. In case of such termination, no damages shall be claimed by either party against the other, save and except those which had occurred under any other clause of this contract prior to such termination.

16. **Rights of Rejection:** BNPMIPL reserves the right to reject any or all the applied bids without assigning any reason whatsoever. The enquiry can be rejected on national security grounds.

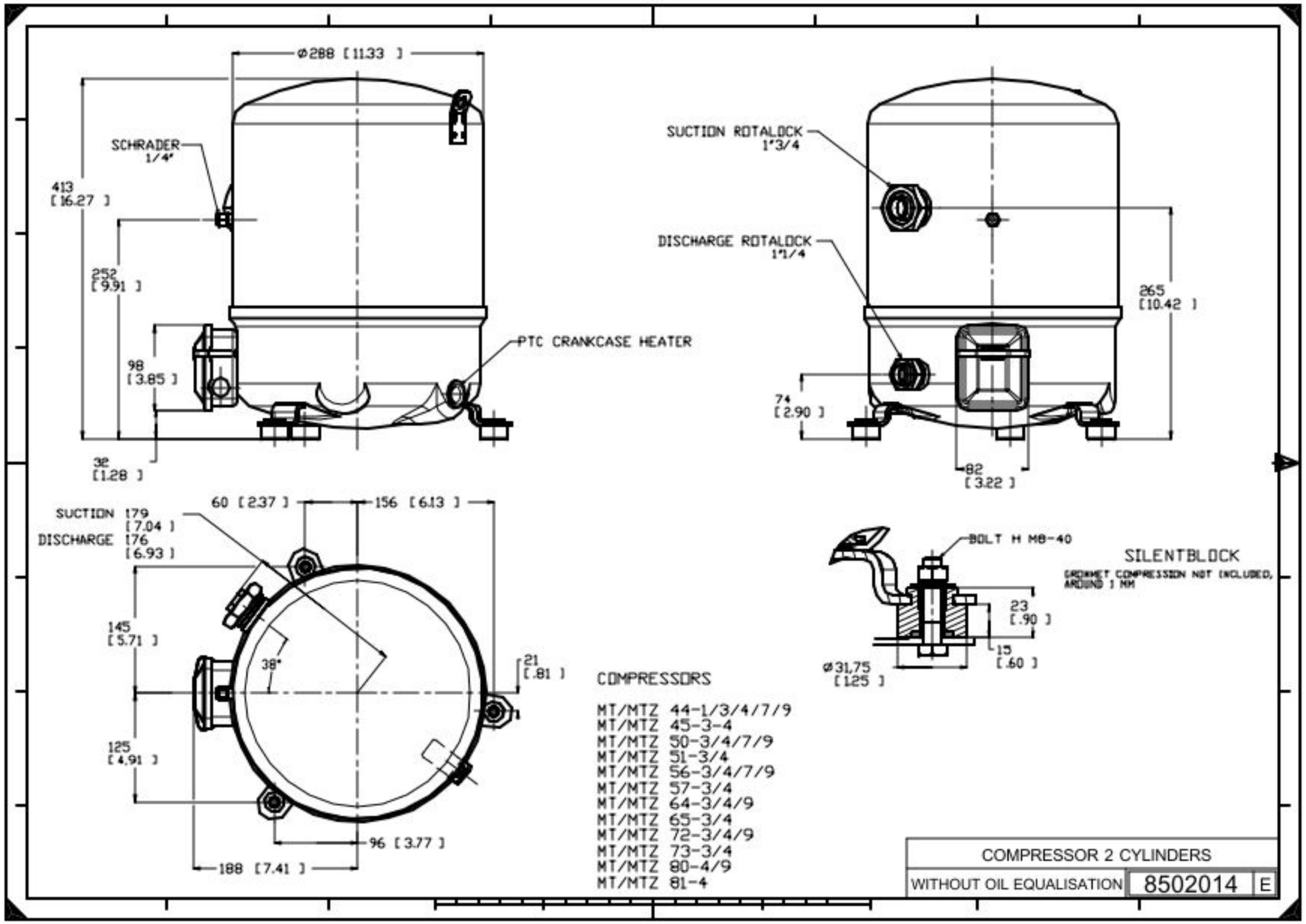

Danfoss can accept no responsibility for possible errors in catalogues, brochures and other printed material. Danfoss reserves the right to alter its products without notice. This also applies to products already on order provided that such alterations can be made without subsequential changes being necessary in specifications already agreed. All trademarks in this material are property of the respective companies. Danfoss, the Danfoss logotype and Maneurop are trademarks of Danfoss A/S. All rights reserved.

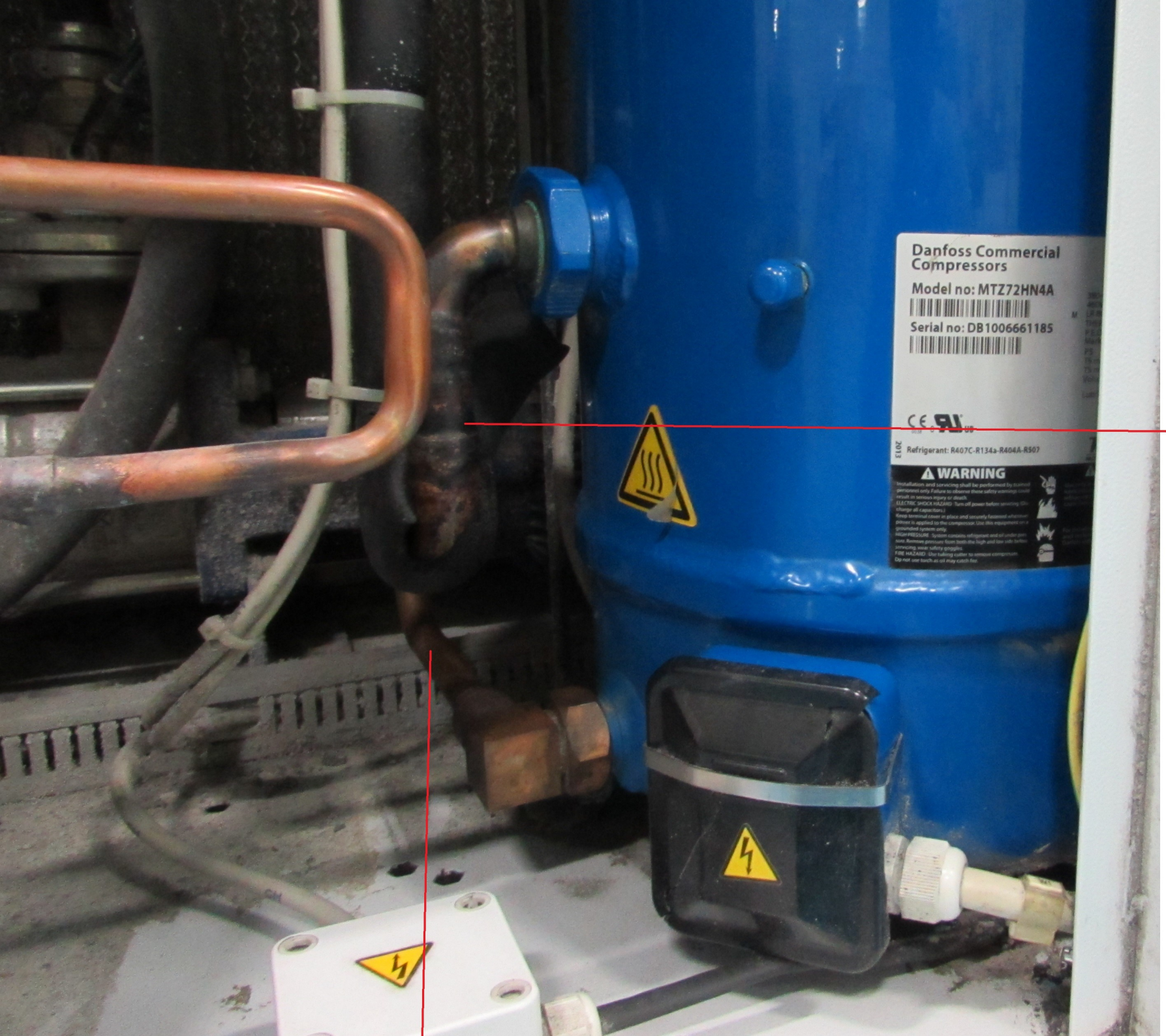

SUCTION: 23 mm

17. **Price Bid Format:**

Sl. No.	Material Description	UOM	Qty	Unit Price (INR)	P&F, Insurance & Freight Charges (INR)	GST@ _____% Amount (INR)	Unit price including P&F, Insurance, Freight & GST (INR)	Total price inclusive of P&F, Insurance, Freight & GST (F.O.R, BNPM, Mysuru) (INR)	Input GST Credit (INR) {GST amount * Total quantity}	Effective price inclusive of P&F, Insurance, Freight (F.O.R, BNPM, Mysuru) (INR)
A	B	C	D	E	F	G	H=E+F+G	I=H*D	J=G*D	K=I-J
1	Refrigerant Compressor (Reciprocating Type) along with all accessories- (As per the technical specification mentioned hereunder)	Nos.	1							

Note: Price Bid Evaluation shall be done on the basis of schedule wise effective price (i.e without GST) to decide L-1 bidder.

We hereby confirm that

1. We accept all the technical specification, scope of supply, all terms & conditions mentioned in the enquiry.
2. Payment Terms: 100% within 30 days from the date of receipt and acceptance of goods as per technical specification and scope of work at BNPM Plant, Mysuru.
3. Price quoted is inclusive of P&F, Insurance, Freight and GST on F.O.R Basis, BNPM Plant, Mysuru.
4. Bid validity: 90 days from the date of enquiry closing date.
5. HSN Code:(i)……
6. Delivery period: …… (Days / Weeks)
7. Warranty Period: …….. Months (Time Period to be specified, in case warranty period is less than 12 months / NA to mentioned in the in case warranty is not applicable)
8. Bank Details: Acc. No. ……..; Bank Name: ……..; Branch name: ……..; Branch Code: ……..; IFSC: ……..;
9. MSME / NSIC status: …….. (If yes, then supporting document to be submitted along with the offer)
   (Please fill above: MSI – For Micro Enterprises; SSI – For Small Enterprises; MED.SI – For Medium Enterprises; NSIC – For National Small Industries Corporation regd. firm)
10. Bid Security Declaration has been submitted as per the format provided at page no. 10

Signature of bidder: ……..

Contact Person: ……..; Contact No. ……

Email Id: ……..

Name of the Firm with Address: ……..

……

Seal of the firm: ……...

GST No.: ……

NOTE: Interested bidders are recommended to register themselves at company's website https://bnpmindia.com/Vendor.aspx in order to get future enquiries of relevant items.

Format for Bid Security Declaration: **ANNEXURE –A**

OTE No: BNPM/OTE/COMPRESSOR/ 0457/2021-22 dated 13.10.2021

(To be submitted on Company letterhead)

BID SECURITY DECLARATION

We, the undersigned, declare that we will automatically be suspended from being eligible for bidding in any tender with Bank Paper Mill India Private Limited, Mysore for the period of 12 months, if we are withdrawing our Bid during the period of bid validity (or) fail / refuse to furnish the performance security / execute the contract, if awarded.

Signature _____

Name----------

Designation----------

Date----------

Stamp of the Organization----------

ANNEXURE –B

OTE No: BNPM/OTE/COMPRESSOR/ 0457/2021-22 dated 13.10.2021

(To be submitted on the letterhead)

DECLARATION

I have read the clause regarding restrictions on procurement from a bidder of a country which shares a land border with India. I hereby certify that M/s …….. is not from such a country or, if from such a country, has been registered with the Competent Authority. I hereby certify that M/s …….. fulfills all requirements in this regard and is eligible to be considered." (Where applicable, evidence of valid registration by the Competent Authority shall be attached)

I, the undersigned, declare that the item …….... originate in …… (Name of the country).

Signature _____

Name----------

Designation----------

Date----------

Stamp of the Organization----------

ANNEXURE -C

OTE No: BNPM/OTE/COMPRESSOR/ 0457/2021-22 dated 13.10.2021

(To be submitted on the letterhead)

DECLARATION

We do hereby declare that,

1. We have not been blacklisted/ debarred by BNPMIPL/ BRBNMPL/ SPMCIL or any Govt. Departments for participation in tenders. The information provided above is correct and true to the best of my knowledge and belief.

2. The director/proprietor of the bidding firm are not closely related to BNPMIPL.

In case, at any time the information furnished is found to be false, you may disqualify/ debar me/ us as deemed fit.

Signature _____

Name----------

Designation----------

Date----------